GF38 Four-Stroke GAS Engine Exploded Parts View

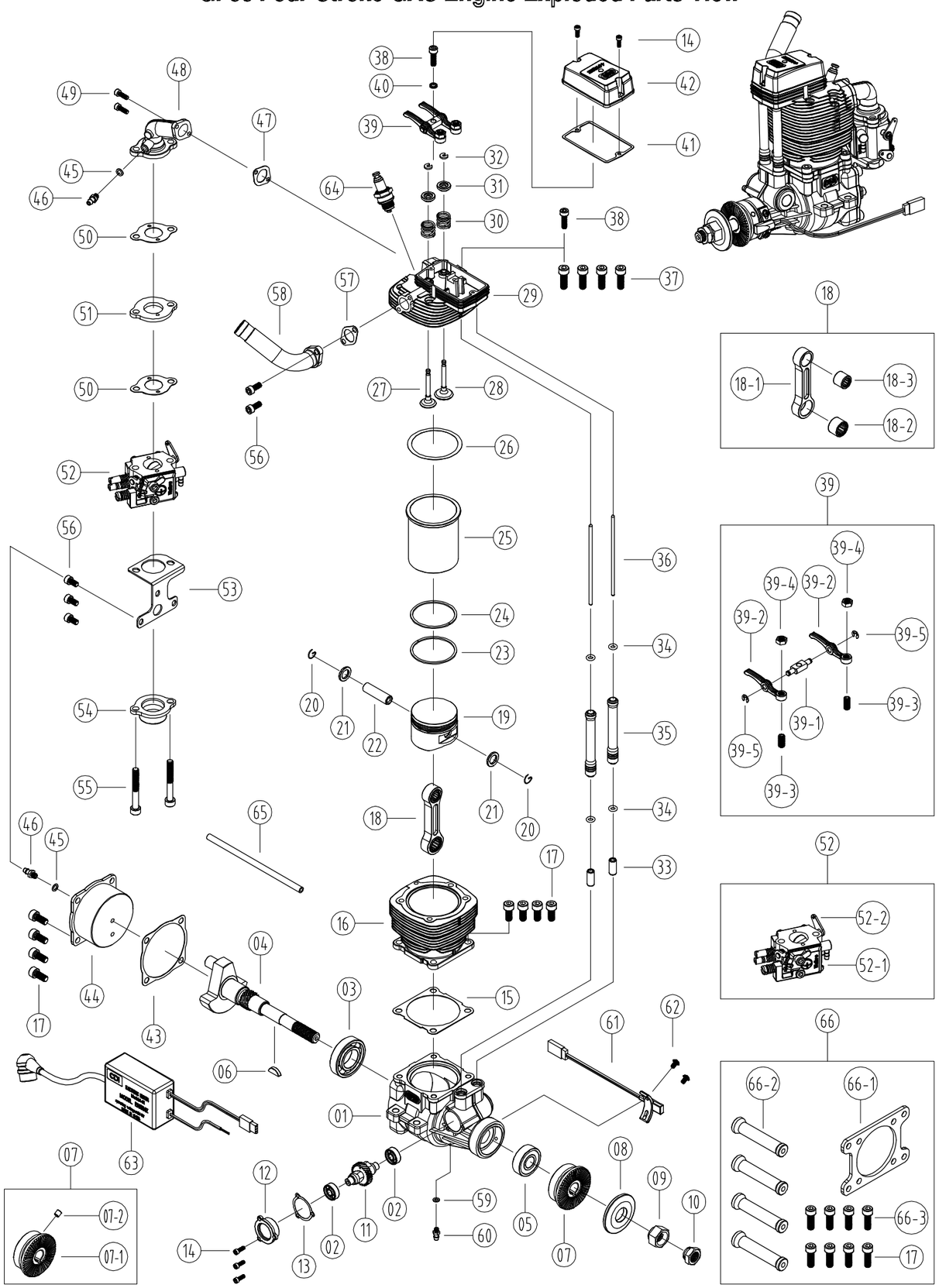

NO	PART	QTY	DESCRIPTION
01	F38101	1	
02	6314	2	605 (5x14x5)
03	6303	1	16003 (17x35x8)
04	F38110	1	
05	6302	1	6000.2RS (10x26x8)
06	6602	1	3x5x13
07	F38150	1	Subassembly
07-1	F38105	1	
07-2	17151	1	
08	F38104	1	
09	6236	1	3/8"-24
10	6237	1	3/8"-24
11	F38301	1	
12	F38302	1	
13	F38303	1	
14	6128	5	M2.5x8

NO	PART	QTY	DESCRIPTION
15	F38109	1	
16	F38106	1	
17	6121	12	M5x12
18	F38120	1	Subassembly
18-1	F38121	1	
18-2	6308	1	HK1010
18-3	6309	1	HK0810
19	F38141	1	
20	F38137	2	
21	F38138	2	
22	F38136	1	
23	F38143Z	1	
24	F38143T	1	
25	F38142	1	
26	F38108	1	
27	F38312	1	

NO	PART	QTY	DESCRIPTION
28	F38311	1	
29	F38102	1	
30	F38315	2	
31	F38313	2	
32	F38314	2	
33	F38304	2	
34	7308	4	
35	F38306	2	
36	F38305	2	
37	6122	4	M5x16
38	6117	2	M4x14
39	F38310	1	Subassembly
39-1	F38309	1	
39-2	F38308	2	
39-3	F38307	2	
39-4	6222	2	M5x0.5

NO	PART	QTY	DESCRIPTION
39-5	6701	2	3x2.5x0.6
40	6414	1	4
41	F38316	1	
42	F38317	1	
43	F38107	1	
44	F38103	1	
45	7303	2	
46	5002	2	
47	F38223	1	
48	F38224	1	
49	6104	2	M3x10
50	17216	2	
51	17217	1	
52	17200	1	
52-1	WT1022	1	
52-2	17218	1	

NO	PART	QTY	DESCRIPTION
53	F38264	1	
54	17222	1	
55	6116	2	M5x40
56	6107	5	M4x10
57	F38406	1	
58	F38401	1	
59	7302	1	
60	5001	1	
61	9103	1	2002
62	9104	2	M3x5
63	9102	1	1104
64	9101	1	CM-6 (2104)
65	F38221	1	D5x1x90
66		1	Accessory bag
66-1	F38113	1	
66-2	35114	4	
66-3	6129	4	M5x14
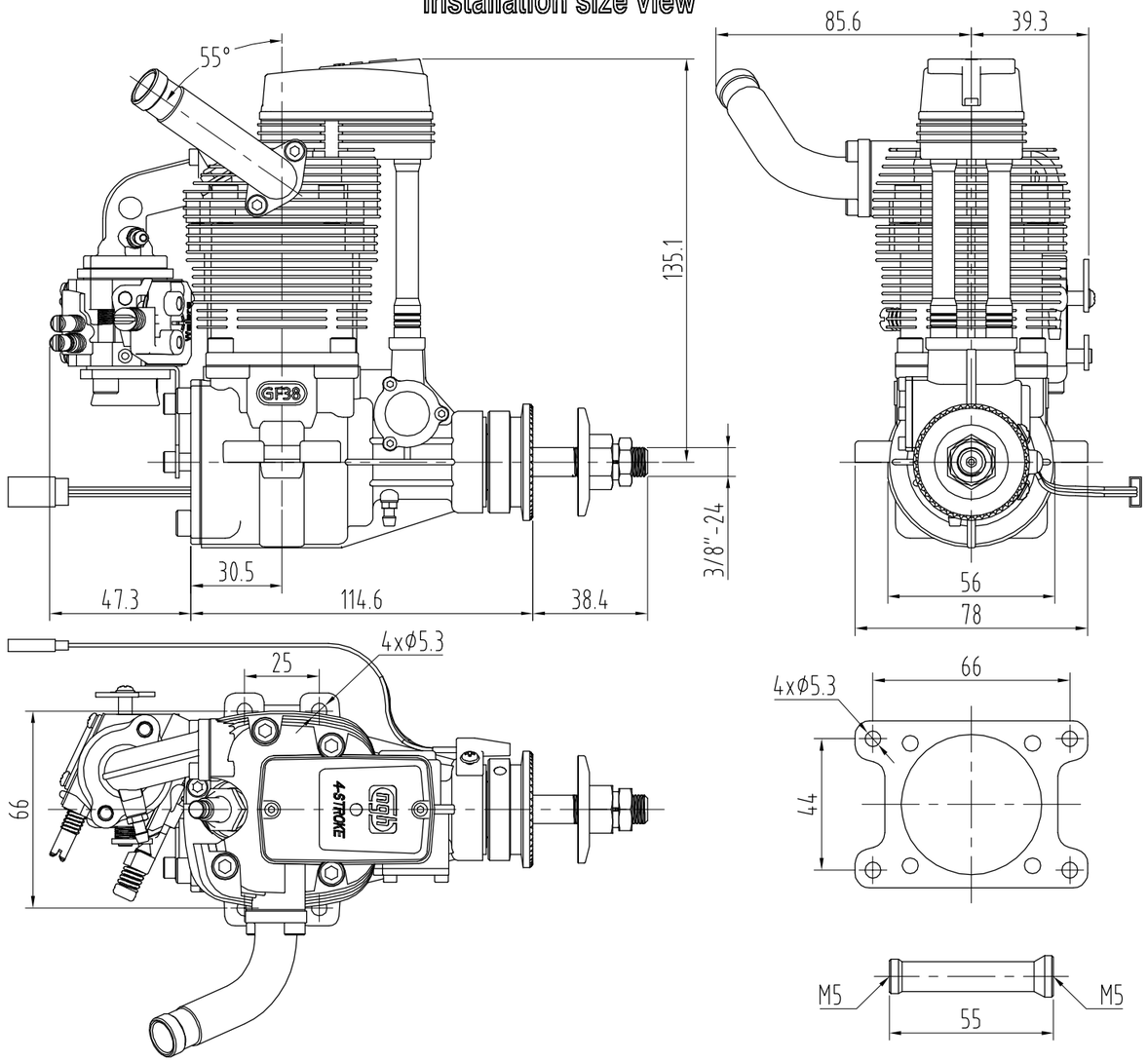
Installation size view