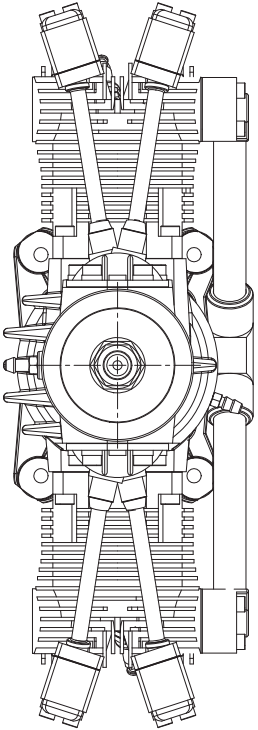

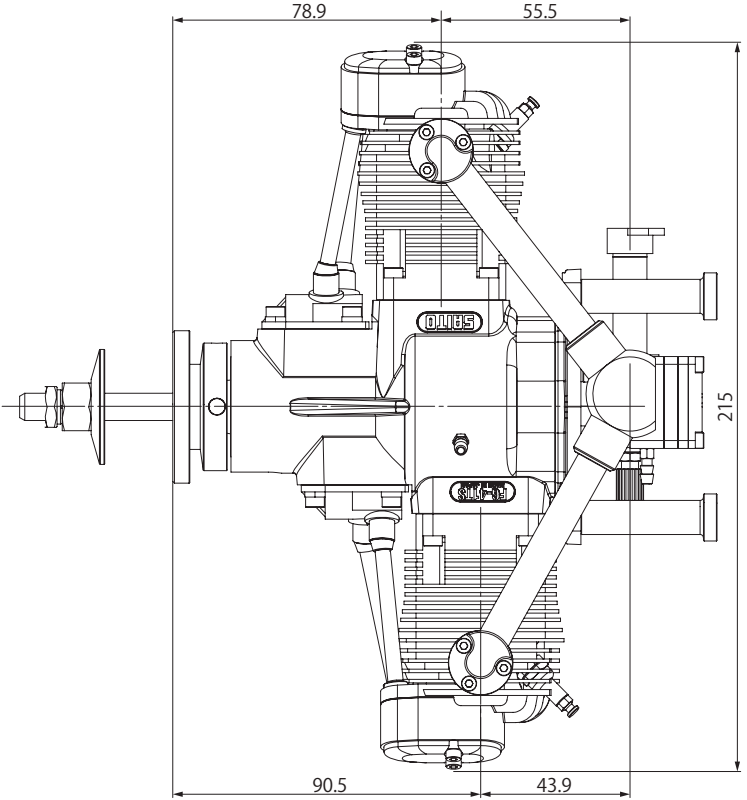
78.9
55.5
215
90.5
43.9

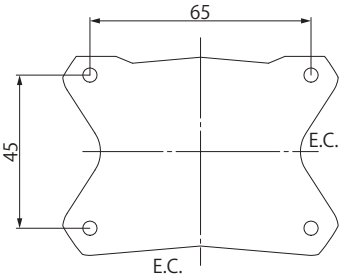
65
45
E.C.
E.C.

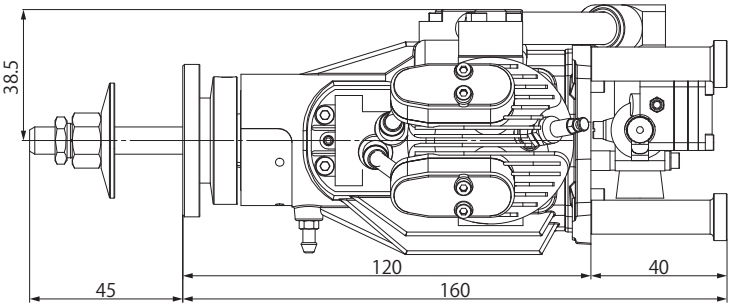
38.5
120
40
45
160